Centre No.						Paper Reference							Surname	Initial(s)
Candidate No.						6	6	6	4	/	0	1	Signature	

Paper Reference(s)

6664/01

Edexcel GCE

Core Mathematics C2

Advanced Subsidiary

Wednesday 20 May 2015 – Morning

Time: 1 hour 30 minutes

Examiner's use only

Team Leader's use only

Question Number	Leave Blank
1	
2	
3	
4	
5	
6	
7	
8	
9	
Total	

Materials required for examination
Mathematical Formulae (Pink)

Items included with question papers
Nil

Candidates may use any calculator allowed by the regulations of the Joint Council for Qualifications. Calculators must not have the facility for symbolic algebra manipulation or symbolic differentiation/integration, or have retrievable mathematical formulae stored in them.

Instructions to Candidates

In the boxes above, write your centre number, candidate number, your surname, initials and signature.
Check that you have the correct question paper.
Answer ALL the questions.
You must write your answer for each question in the space following the question.
When a calculator is used, the answer should be given to an appropriate degree of accuracy.

Information for Candidates

A booklet 'Mathematical Formulae and Statistical Tables' is provided.
Full marks may be obtained for answers to ALL questions.
The marks for individual questions and the parts of questions are shown in round brackets: e.g. **(2)**.
There are 9 questions in this question paper. The total mark for this paper is 75.
There are 32 pages in this question paper. Any blank pages are indicated.

Advice to Candidates

You must ensure that your answers to parts of questions are clearly labelled.
You should show sufficient working to make your methods clear to the Examiner.
Answers without working may not gain full credit.

This publication may be reproduced only in accordance with Pearson Education Ltd copyright policy.
©2015 Pearson Education Ltd.

Printer's Log. No.
P43178A
W850/R6664/57570 5/5/5/5/1/

P 4 3 1 7 8 A 0 1 3 2

Turn over

PEARSON

Leave blank

1. Find the first 3 terms, in ascending powers of x, of the binomial expansion of

$$\left(2 - \frac{x}{4}\right)^{10}$$

giving each term in its simplest form.

(4)

P 4 3 1 7 8 A 0 2 3 2

Leave blank

Question 1 continued

Q1

(Total 4 marks)

Leave blank

2. A circle C with centre at the point $(2, -1)$ passes through the point A at $(4, -5)$.

(a) Find an equation for the circle C.

(3)

(b) Find an equation of the tangent to the circle C at the point A, giving your answer in the form $ax + by + c = 0$, where a, b and c are integers.

(4)

Leave blank

Question 2 continued

Q2

(Total 7 marks)

P 4 3 1 7 8 A 0 5 3 2

Turn over

Leave blank

3. $f(x) = 6x^3 + 3x^2 + Ax + B$, where A and B are constants.

Given that when $f(x)$ is divided by $(x + 1)$ the remainder is 45,

(a) show that $B - A = 48$

(2)

Given also that $(2x + 1)$ is a factor of $f(x)$,

(b) find the value of A and the value of B.

(4)

(c) Factorise $f(x)$ fully.

(3)

P 4 3 1 7 8 A 0 6 3 2

Leave blank

Question 3 continued

Leave blank

Question 3 continued

Leave blank

Question 3 continued

Q3

(Total 9 marks)

P 4 3 1 7 8 A 0 9 3 2

Turn over

Leave blank

4.

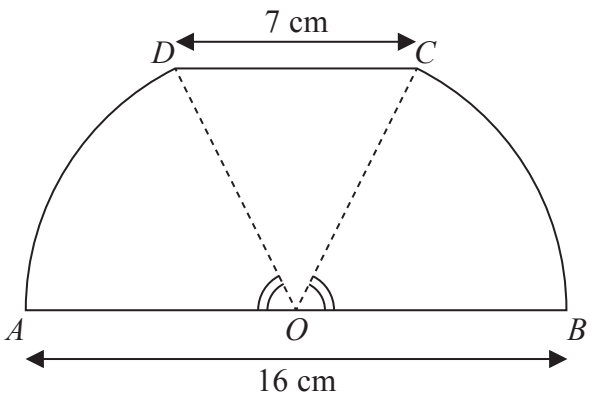

Figure 1

Figure 1 shows a sketch of a design for a scraper blade. The blade *AOBCDA* consists of an isosceles triangle *COD* joined along its equal sides to sectors *OBC* and *ODA* of a circle with centre *O* and radius 8 cm. Angles *AOD* and *BOC* are equal. *AOB* is a straight line and is parallel to the line *DC*. *DC* has length 7 cm.

(a) Show that the angle *COD* is 0.906 radians, correct to 3 significant figures.
(2)

(b) Find the perimeter of *AOBCDA*, giving your answer to 3 significant figures.
(3)

(c) Find the area of *AOBCDA*, giving your answer to 3 significant figures.
(3)

P 4 3 1 7 8 A 0 1 0 3 2

Leave blank

Question 4 continued

Leave blank

Question 4 continued

Leave blank

Question 4 continued

Q4

(Total 8 marks)

P 4 3 1 7 8 A 0 1 3 3 2

Turn over

Leave blank

5. (i) All the terms of a geometric series are positive. The sum of the first two terms is 34 and the sum to infinity is 162

Find

(a) the common ratio,

(4)

(b) the first term.

(2)

(ii) A different geometric series has a first term of 42 and a common ratio of $\frac{6}{7}$.

Find the smallest value of n for which the sum of the first n terms of the series exceeds 290

(4)

Leave blank

Question 5 continued

Leave blank

Question 5 continued

Leave blank

Question 5 continued

(Total 10 marks)

Q5

Leave blank

6. (a) Find

$$\int 10x(x^{\frac{1}{2}} - 2)\,dx$$

giving each term in its simplest form.

(4)

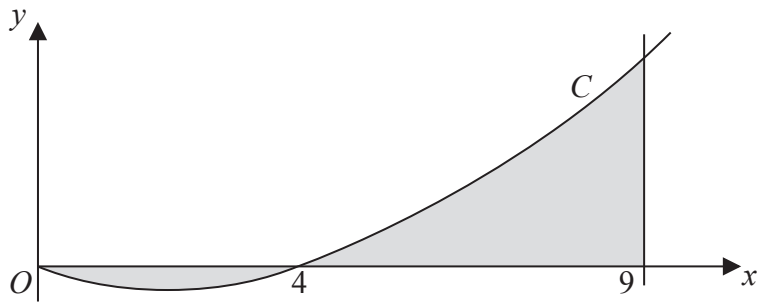

Figure 2

Figure 2 shows a sketch of part of the curve C with equation

$$y = 10x(x^{\frac{1}{2}} - 2), \qquad x \geqslant 0$$

The curve C starts at the origin and crosses the x-axis at the point (4, 0).

The area, shown shaded in Figure 2, consists of two finite regions and is bounded by the curve C, the x-axis and the line $x = 9$

(b) Use your answer from part (a) to find the total area of the shaded regions.

(5)

P 4 3 1 7 8 A 0 1 8 3 2

Leave blank

Question 6 continued

Leave blank

Question 6 continued

Leave blank

Question 6 continued

Q6

(Total 9 marks)

Leave blank

7. (i) Use logarithms to solve the equation $8^{2x+1} = 24$, giving your answer to 3 decimal places.

(3)

(ii) Find the values of y such that

$$\log_2(11y - 3) - \log_2 3 - 2\log_2 y = 1, \qquad y > \frac{3}{11}$$

(6)

P 4 3 1 7 8 A 0 2 2 3 2

Leave blank

Question 7 continued

Leave blank

Question 7 continued

Leave blank

Question 7 continued

Q7

(Total 9 marks)

Leave blank

8. (i) Solve, for $0 \leqslant \theta < \pi$, the equation

$$\sin 3\theta - \sqrt{3}\cos 3\theta = 0$$

giving your answers in terms of π.

(3)

(ii) Given that

$$4\sin^2 x + \cos x = 4 - k, \qquad 0 \leqslant k \leqslant 3$$

(a) find $\cos x$ in terms of k.

(3)

(b) When $k = 3$, find the values of x in the range $0 \leqslant x < 360°$

(3)

P 4 3 1 7 8 A 0 2 6 3 2

Leave blank

Question 8 continued

Leave blank

Question 8 continued

Leave blank

Question 8 continued

Q8

(Total 9 marks)

Leave blank

9. A solid glass cylinder, which is used in an expensive laser amplifier, has a volume of 75π cm^3.
The cost of polishing the surface area of this glass cylinder is £2 per cm^2 for the curved surface area and £3 per cm^2 for the circular top and base areas.

Given that the radius of the cylinder is r cm,

(a) show that the cost of the polishing, £C, is given by

$$C = 6\pi r^2 + \frac{300\pi}{r}$$

(4)

(b) Use calculus to find the minimum cost of the polishing, giving your answer to the nearest pound.

(5)

(c) Justify that the answer that you have obtained in part (b) is a minimum.

(1)

P 4 3 1 7 8 A 0 3 0 3 2

Leave blank

Question 9 continued

Leave blank

Question 9 continued

Q9

(Total 10 marks)

TOTAL FOR PAPER: 75 MARKS

END

P 4 3 1 7 8 A 0 3 2 3 2